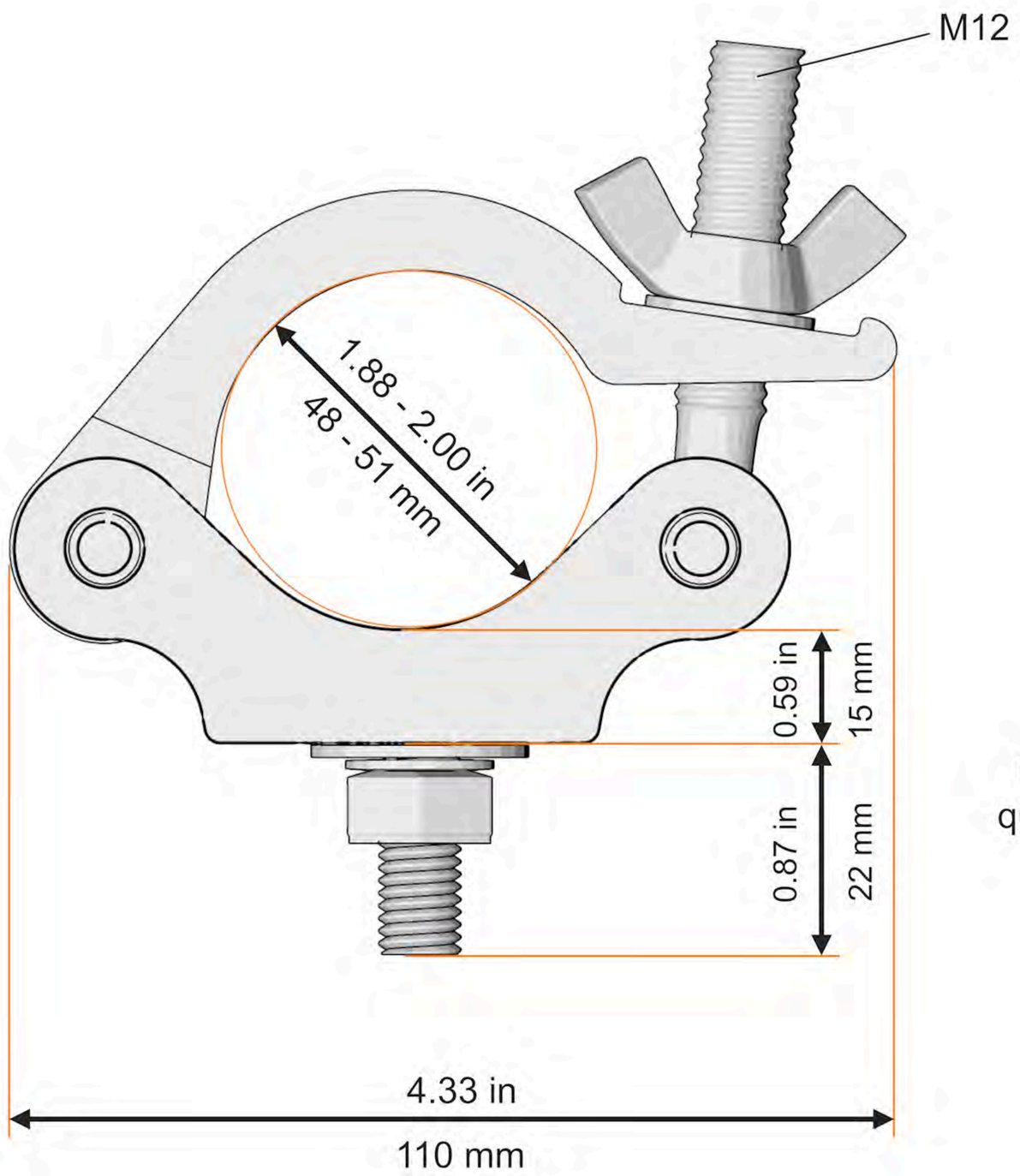
M12
1.88 - 2.00 in
48 - 51 mm
0.59 in
15 mm
0.87 in
22 mm
4.33 in
110 mm

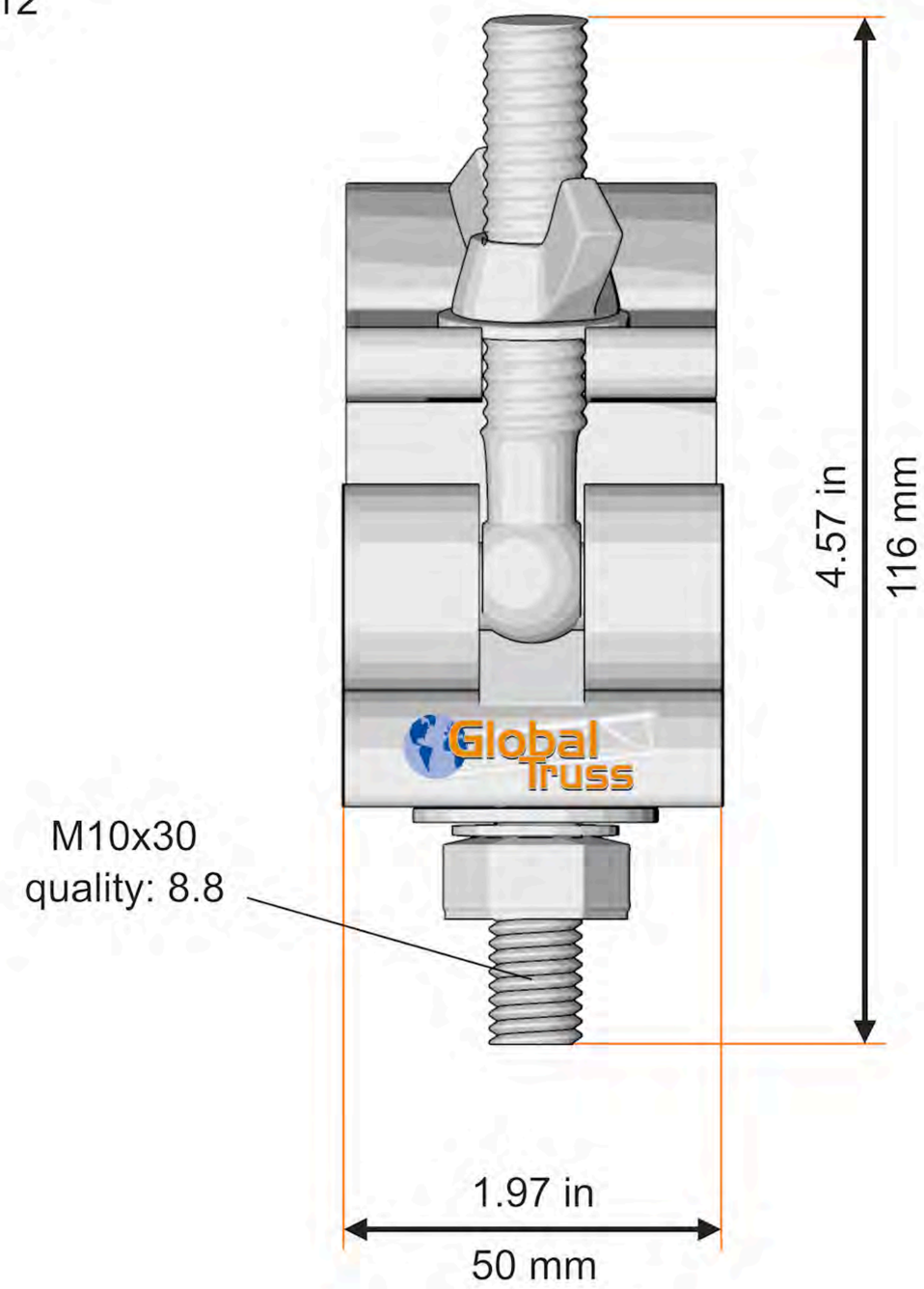
4.57 in
116 mm
M10x30
quality: 8.8
1.97 in
50 mm